Split

Work Order ID 67590 -1

Monday, March 28, 2011 11:42:48 AM

Item ID: D3564-9 **Accept** **Setup Start**
Revision ID: **Stop**
Item Name: Wearshoe

Start Date: 3/28/2011 **Start Qty:** 16.00 **Cust Item ID:**
Required Date: 3/31/2011 **Req'd Qty:** 16.00 **Customer:**
Reference:

Approvals: **Process Plan:** M **Date:** 11-03-28 **Tooling:** _____ **Date:** _____ **Run Start**
QC: _____ **Date:** _____ **SPC (Y/N):** _____ **Date:** _____ **Stop**

Sequence ID/ Work Center ID	Operation Description	Set Up/ Run Hours	Tool ID	Tool #	Plan Code	Accept Qty	Reject Qty	Reject Number	Insp. Stamp
Draw Nbr	**Revision Nbr**								
D3564	Rev D								
100	FLOW WATER JET	0.00							
Waterjet	**Memo**	0.00				HB11-4-4			
FLOW CNC Waterjet	1-Cut as per Dwg D3564 *****(D3564-1F)*****☐Dwg Rev: D ☐Prog Rev: D ☐2-Deburr if necessary								
304.063								(16)	
110	QC2- Inspect parts off machine FAI/FAIB	0.00							
QC	**Memo**	0.00				HB11-4-4			
Quality Control									
120	QC8- Inspect parts - second check	0.00							
QC	**Memo**	0.00				(X16)			
Quality Control									

Dart Aerospace Ltd

W/O:		WORK ORDER CHANGES					
DATE	STEP	PROCEDURE CHANGE	By	Date	Qty	Approval Chief Eng / Prod Mgr	Approval QC Inspector

Part No: _____ **PAR #:** _____ **Fault Category:** _____ **NCR:** Yes No **DQA:** _____ **Date:** _____

Resolution: _____ **Disposition:** _____ **QA: N/C Closed:** _____ **Date:** _____

NCR:		WORK ORDER NON-CONFORMANCE (NCR)						
DATE	STEP	Description of NC Section A	Corrective Action Section B			Verification Section C	Approval Chief Eng	Approval QC Inspector
			Initial Chief Eng	Action Description Chief Eng	Sign & Date			

NOTE: Date & initial all entries

H:\fFORMS\Quality Assurance\approved QA\NCRWO RevE

Work Order ID 67590

Monday, March 28, 2011 11:42:48 AM

Item ID: D3564-9 **Accept** **Setup Start**

Revision ID: **Stop**

Item Name: Wearshoe

Start Date: 3/28/2011 **Start Qty:** 16.00 **Cust Item ID:**

Required Date: 3/31/2011 **Req'd Qty:** 16.00 **Customer:**

Reference:

Run Start

Approvals: **Process Plan:** _____ **Date:** _____ **Tooling:** _____ **Date:** _____

Stop

QC: _____ **Date:** _____ **SPC (Y/N):** _____ **Date:** _____

Sequence ID/ Work Center ID	Operation Description	Set Up/ Run Hours	Tool ID	Tool #	Plan Code	Accept Qty	Reject Qty	Reject Number	Insp. Stamp
130	NC BRAKE	0.00				16			
Brake NC	**Memo**	0.00							
Brake NC	Deburr if necessary□Form on Brake as per Dwg D3564 using Jigs DT 8129 and DT 8155□Form Joggle as per Dwg D3564 on brake using Jig DT 8157 SB 11/04/06								
140	QC5- Inspect part completeness to step on W/O	0.00				16			
QC	**Memo**	0.00							
Quality Control	Ensure joggle as per dwg D3429								
150	Large Fab	0.00				EL	11-4-14	DC4	
Large Fab	**Memo**	0.00							
Large Fab	Qty Description Batch□A/R 2059B Hardcoat M 117189 □Weld hardcoat as per Dwg D3564								

Dart Aerospace Ltd

W/O:		WORK ORDER CHANGES					
DATE	STEP	PROCEDURE CHANGE	By	Date	Qty	Approval Chief Eng / Prod Mgr	Approval QC Inspector

Part No: _____ **PAR #:** _____ **Fault Category:** _____ **NCR:** Yes No **DQA:** _____ **Date:** _____

Resolution: _____ **Disposition:** _____ **QA: N/C Closed:** _____ **Date:** _____

NCR:		WORK ORDER NON-CONFORMANCE (NCR)						
DATE	STEP	Description of NC Section A	Corrective Action Section B			Verification Section C	Approval Chief Eng	Approval QC Inspector
			Initial Chief Eng	Action Description Chief Eng	Sign & Date			

NOTE: Date & initial all entries

Work Order ID 67590

Monday, March 28, 2011 11:42:48 AM

Item ID: D3564-9 **Accept** **Setup Start** **Stop**

Revision ID:

Item Name: Wearshoe

Start Date: 3/28/2011 **Start Qty:** 16.00 **Cust Item ID:**

Required Date: 3/31/2011 **Req'd Qty:** 16.00 **Customer:**

Reference:

Run Start **Stop**

Approvals: **Process Plan:** _____ **Date:** _____ **Tooling:** _____ **Date:** _____

QC: _____ **Date:** _____ **SPC (Y/N):** _____ **Date:** _____

Sequence ID/ Work Center ID	Operation Description	Set Up/ Run Hours	Tool ID	Tool #	Plan Code	Accept Qty	Reject Qty	Reject Number	Insp. Stamp
160	QC10- Inspect visual per QSI004- ground welds	0.00				GC 11.04.14			
QC	Memo	0.00							
Quality Control									
170	QC5- Inspect part completeness to step on W/O	0.00				M	11	04	14 (4)
QC	Memo	0.00							
Quality Control									
180	Grey Sandtex(Ref:4.3.5.6) per QSI005 4.3	0.00				4.	BL	11-4-15.	
Powdercoat	M115128. Memo	0.00							
Powder Coating	START TIME: 10:00 ☐OVEN TEMPERATURE: 320° ☐FINISH TIME: 10:30.								

Dart Aerospace Ltd

W/O:		WORK ORDER CHANGES					
DATE	STEP	PROCEDURE CHANGE	By	Date	Qty	Approval Chief Eng / Prod Mgr	Approval QC Inspector

Part No: _____ **PAR #:** _____ **Fault Category:** _____ **NCR:** Yes No **DQA:** _____ **Date:** _____

Resolution: _____ **Disposition:** _____ **QA: N/C Closed:** _____ **Date:** _____

NCR:		WORK ORDER NON-CONFORMANCE (NCR)						
DATE	STEP	Description of NC Section A	Corrective Action Section B			Verification Section C	Approval Chief Eng	Approval QC Inspector
			Initial Chief Eng	Action Description Chief Eng	Sign & Date			

NOTE: Date & initial all entries

Work Order ID 67590

Monday, March 28, 2011 11:42:48 AM

Item ID: D3564-9 **Accept** **Setup Start**

Revision ID: **Stop**

Item Name: Wearshoe

Start Date: 3/28/2011 **Start Qty:** 16.00 **Cust Item ID:**

Required Date: 3/31/2011 **Req'd Qty:** 16.00 **Customer:**

Reference:

Run Start

Approvals: **Process Plan:** _____ **Date:** _____ **Tooling:** _____ **Date:** _____

Stop

QC: _____ **Date:** _____ **SPC (Y/N):** _____ **Date:** _____

Sequence ID/ Work Center ID	Operation Description	Set Up/ Run Hours	Tool ID	Tool #	Plan Code	Accept Qty	Reject Qty	Reject Number	Insp. Stamp
190	QC3- Inspect Part Finish	0.00							
QC	Memo	0.00				4	ø	4	[illegible]
Quality Control									
200	Identify as per dwg & Stock Location FP-19	0.00							
Packaging	Memo	0.00				4	BL	4-4-18.	
Packaging									
210	QC21- Final Inspection - Work Order Release	0.00							
QC	Memo	0.00						11/4/18	
Quality Control									

[illegible] 14.04.18

Dart Aerospace Ltd

W/O:		WORK ORDER CHANGES					
DATE	STEP	PROCEDURE CHANGE	By	Date	Qty	Approval Chief Eng / Prod Mgr	Approval QC Inspector

Part No: _____ **PAR #:** _____ **Fault Category:** _____ **NCR:** Yes No **DQA:** _____ **Date:** _____

Resolution: _____ **Disposition:** _____ **QA: N/C Closed:** _____ **Date:** _____

NCR:		WORK ORDER NON-CONFORMANCE (NCR)						
DATE	STEP	Description of NC Section A	Corrective Action Section B			Verification Section C	Approval Chief Eng	Approval QC Inspector
			Initial Chief Eng	Action Description Chief Eng	Sign & Date			

NOTE: Date & initial all entries

Picklist Print

Monday, March 28, 2011 11:42:55 AM

Work Order ID: 67590

Parent Item: D3564-9

Parent Item Name: Wearshoe

Start Date: 3/28/2011 **Required Date:** 3/31/2011

Start Qty: 16.00 **Required Qty:** 16.00

Comments:
IPP Rev:A New Issue 07-03-08 ec
IPP Rev:B As per Rev C 07-07-09 JLM
IPP Rev:C As per Rev D 07-09-09 JLM Verified By:EC

Component Item ID/ Item Name	Replacement Item ID	Mfg/ Purch	Bin Item	Primary Location	Last Location	Route Seq ID	Unit of Measure	Qty on Hand	Qty per Kit	Total Qty	Qty Issued	Date Issued	Status
M304S16GA 304/316 Sheet .063		Purchased	No			100	sf	4.0000	1.41	23.74737			

Location	Loc Qty	Loc Code
MAT020	4	
116623	4	

~~116624~~
117 875

16

Dart Aerospace Ltd

W/O:		WORK ORDER CHANGES					
DATE	STEP	PROCEDURE CHANGE	By	Date	Qty	Approval Chief Eng / Prod Mgr	Approval QC Inspector

Part No: _____ **PAR #:** _____ **Fault Category:** _____ **NCR:** Yes No **DQA:** _____ **Date:** _____

Resolution: _____ **Disposition:** _____ **QA: N/C Closed:** _____ **Date:** _____

NCR:		WORK ORDER NON-CONFORMANCE (NCR)						
DATE	STEP	Description of NC Section A	Corrective Action Section B			Verification Section C	Approval Chief Eng	Approval QC Inspector
			Initial Chief Eng	Action Description Chief Eng	Sign & Date			

NOTE: Date & initial all entries

DART AEROSPACE LTD	Work Order:	67580
Description: Wearshoe	**Part Number:**	D3564-9
Inspection Dwg: D3564 **Rev:** D		Page 1 of 1

FIRST ARTICLE INSPECTION CHECKLIST

[X] First Article [ ] Prototype

Drawing Dimension	Tolerance	Actual Dimension	Accept	Reject	Method of Inspection	Comments
3.227	+/-0.010	3.222	✓		V HB02	
2.432	+/-0.010	2.437	✓		V	
2.50	+/-0.030	2.80	✓		V	
6.000	+/-0.010	6.000	✓		T HB01	
12.104	+/-0.010	12.104	✓		T	
18.000	+/-0.010	18.000	✓		T	
18.000	+/-0.010	18.000	✓		T	
18.00	+/-0.030	18.00	✓		T	
9.00	+/-0.030	9.00	✓		T	
11.50	+/-0.030	11.50	✓		T	
0.300 x 0.300	+/-0.010	301 x 302	✓		V	
Ø0.188	+0.005/-0.001	.190	✓		V	
R0.375	+/-0.010	.375	✓		R.G.	
0.063	+/-0.010	.058	✓		V	

Measured by:	HB	Audited by:		Prototype Approval:	N/A
Date:	11-4-4	Date:	11/04/05	Date:	N/A

Rev	Date	Change	Revised by	Approved
A	08.01.16	New Issue	KJ/EC/DD	

Dart Aerospace Ltd

W/O:		WORK ORDER CHANGES					
DATE	STEP	PROCEDURE CHANGE	By	Date	Qty	Approval Chief Eng / Prod Mgr	Approval QC Inspector

Part No: _____ **PAR #:** _____ **Fault Category:** _____ **NCR:** Yes No **DQA:** _____ **Date:** _____

Resolution: _____ **Disposition:** _____ **QA: N/C Closed:** _____ **Date:** _____

NCR:		WORK ORDER NON-CONFORMANCE (NCR)						
DATE	STEP	Description of NC Section A	Corrective Action Section B			Verification Section C	Approval Chief Eng	Approval QC Inspector
			Initial Chief Eng	Action Description Chief Eng	Sign & Date			

NOTE: Date & initial all entries

H:\fFORMS\Quality Assurance\approved QA\NCRWO RevE

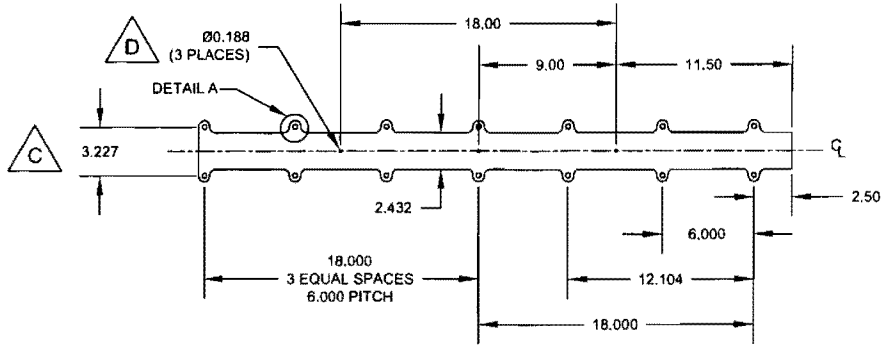

D3564-1F FLAT PATTERN

SHOP COPY
RETURN TO
ENGINEERING
UNCONTROLLED COPY
SUBJECT TO AMENDMENT
WITHOUT NOTICE
WORK ORDER
NO. 67590
pl 1103-26

RELEASED
07.09.04

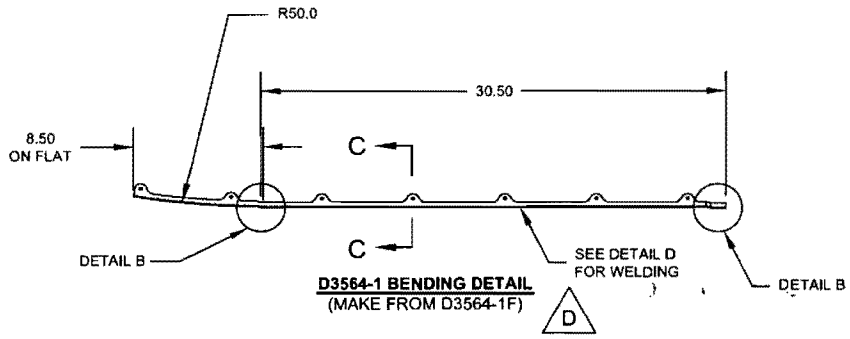

D3564-1 BENDING DETAIL
(MAKE FROM D3564-1F)

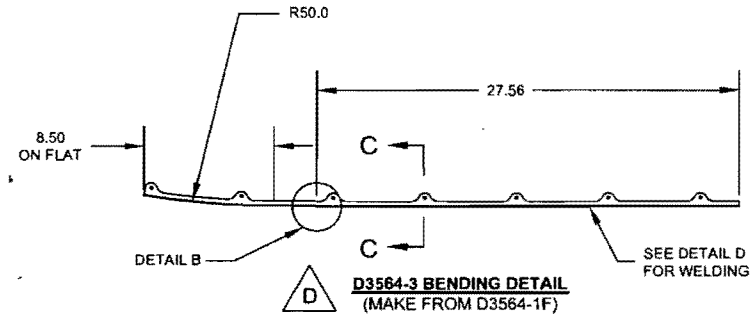

D3564-3 BENDING DETAIL
(MAKE FROM D3564-1F)

REV.	DESCRIPTION	BY	DATE
D	UPDATE DRAWING TEMPLATE; CHANGE ALL (TYP X PLS) TO (X PLACES); PG1 A8: UPDATE NOTES; PG1 A8, PG3 B5,C5: ADD D3564-15; PG1 B6,B3: D3564-1/-3 WAS ONE FIGURE; PG2 A7,A3: D3564-9/-11 WAS ONE FIGURE; PG2 A7,A3: D3564-9/-11 WAS ON PG1; PG3 B8,C8: D3564-13 WAS ON PG2; PG3 D2: WELDING DETAIL WAS ON PG1 PG3 A5,7,B2: RELOCATE DETAILS AND SECTION; PG3 A5,7,B2: INCREASE DETAIL AND SECTION SIZE	CB	07.08.21
C	MOVE TAB OUTBOARD, DETAIL A	PH	07.04.17
B	ADD AMS 5513 AND AMS 5524	PH	07.03.20
A	NEW ISSUE	PH	06.12.18

D3564-1/-3/-5/-7/-9/-11/-13/-15 WEARPLATE NOTES:

1) MATERIAL: AISI 304/316 SS SHEET PER AMS 5513 OR AMS 5524, 16 GAUGE (0.063 THICK)
(REF DART MATERIAL SPEC M304S16GA)
2) FINISH: POWDER COAT GREY SANDTEX (REF 4.3.5.6) PER DART QSI 005 4.3
3) TOLERANCES: PER DART QSI 018 UNLESS OTHERWISE NOTED
4) UNITS: INCHES UNLESS OTHERWISE NOTED
5) BREAK SHARP EDGES: 0.005 TO 0.015 MAX
6) IDENTIFICATION: NONE
7) WEIGHT: SEE TABLE IN ZONE A3
8) WELD PER DART QSI 004
9) SEE PG 3 FOR SECTIONS AND DETAILS
10) PARTS ARE SYMMETRIC ABOUT ℄

WEIGHTS:

D3564-1	1.85 lbs
D3564-3	1.85 lbs
D3564-5	1.93 lbs
D3564-7	1.26 lbs
D3564-9	1.85 lbs
D3564-11	1.85 lbs
D3564-13	0.38 lbs
D3564-15	0.80 lbs

DESIGN	PH	**DART AEROSPACE LTD** HAWKESBURY, ONTARIO, CANADA
DRAWN	CB	
CHECKED	PH	DRAWING NO. REV. D
MFG. APPR.		D3564 SHEET 1 OF 3
APPROVED		TITLE SCALE
DE APPR.		WEARSHOE 1:8
DATE	07.08.21	

COPYRIGHT © 2006 BY DART AEROSPACE LTD
THIS DOCUMENT IS PRIVATE AND CONFIDENTIAL AND IS SUPPLIED ON THE EXPRESS CONDITION THAT IT IS NOT TO BE USED FOR ANY PURPOSE OR COPIED OR COMMUNICATED TO ANY OTHER PERSON WITHOUT WRITTEN PERMISSION FROM DART AEROSPACE LTD.

Dart Aerospace Ltd

W/O:		WORK ORDER CHANGES					
DATE	STEP	PROCEDURE CHANGE	By	Date	Qty	Approval Chief Eng / Prod Mgr	Approval QC Inspector

Part No: _____ **PAR #:** _____ **Fault Category:** _____ **NCR:** Yes No **DQA:** _____ **Date:** _____

Resolution: _____ **Disposition:** _____ **QA: N/C Closed:** _____ **Date:** _____

NCR:		WORK ORDER NON-CONFORMANCE (NCR)						
DATE	STEP	Description of NC Section A	Corrective Action Section B			Verification Section C	Approval Chief Eng	Approval QC Inspector
			Initial Chief Eng	Action Description Chief Eng	Sign & Date			

NOTE: Date & initial all entries

H:\FORMS\Quality Assurance\approved QA\NCRWO RevE

w/o G7580

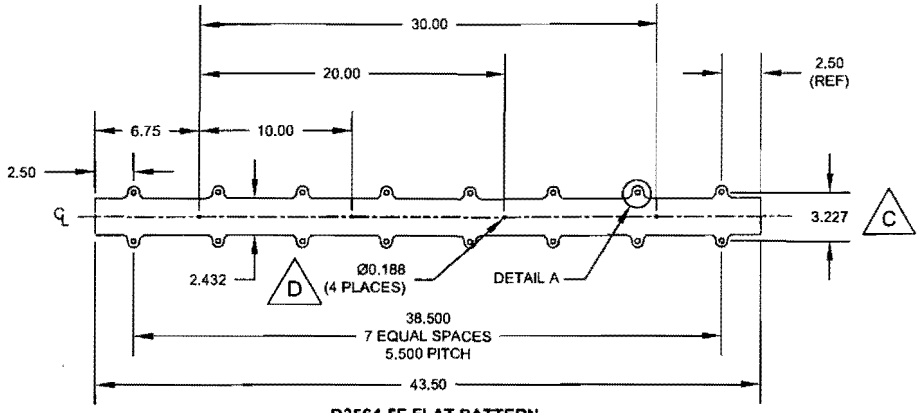

D3564-5F FLAT PATTERN

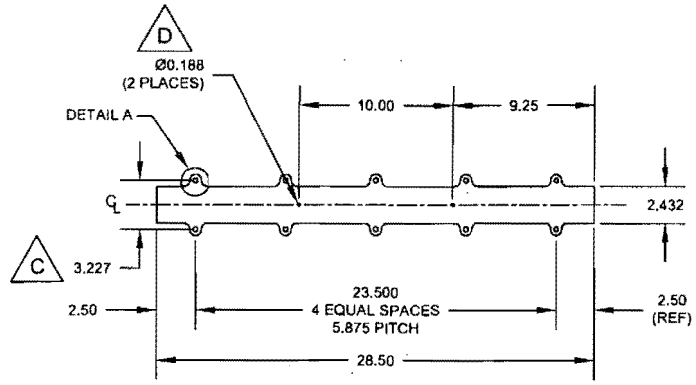

D3564-7F FLAT PATTERN

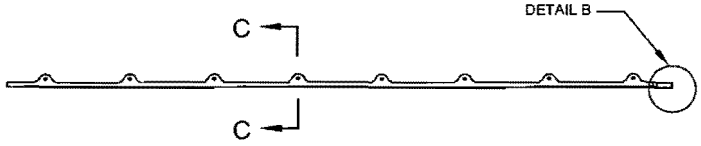

D3564-5 BENDING DETAIL
(MAKE D3564-5 FROM D3564-5F)

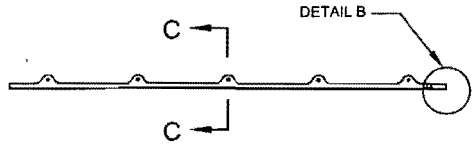

D3564-7 BENDING DETAIL
(MAKE D3564-7 FROM D3564-7F)

RELEASED
07.09.04

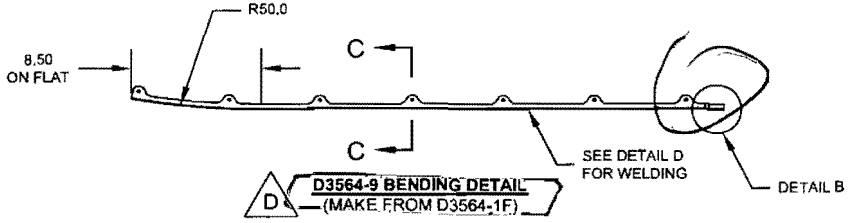

D **D3564-9 BENDING DETAIL**
(MAKE FROM D3564-1F)

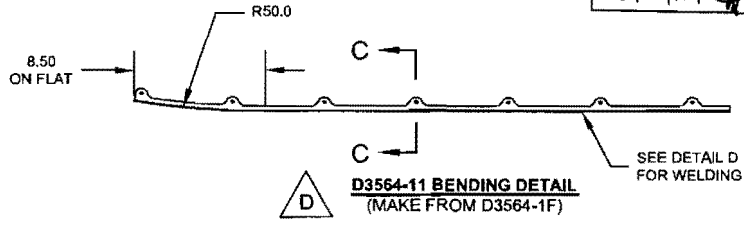

D **D3564-11 BENDING DETAIL**
(MAKE FROM D3564-1F)

DESIGN	PH	**DART AEROSPACE LTD** HAWKESBURY, ONTARIO, CANADA
DRAWN	C.B	
CHECKED	PH	DRAWING NO. D3564 — REV. D — SHEET 2 OF 3
MFG. APPR.		
APPROVED		TITLE: WEARSHOE — SCALE 1:8
DE APPR.		
DATE	07.08.21	

COPYRIGHT © 2006 BY DART AEROSPACE LTD
THIS DOCUMENT IS PRIVATE AND CONFIDENTIAL AND IS SUPPLIED ON THE EXPRESS CONDITION THAT IT IS NOT TO BE USED FOR ANY PURPOSE OR COPIED OR COMMUNICATED TO ANY OTHER PERSON WITHOUT WRITTEN PERMISSION FROM DART AEROSPACE LTD.

Dart Aerospace Ltd

W/O:		WORK ORDER CHANGES					
DATE	STEP	PROCEDURE CHANGE	By	Date	Qty	Approval Chief Eng / Prod Mgr	Approval QC Inspector

Part No: _____ **PAR #:** _____ **Fault Category:** _____ **NCR:** Yes No **DQA:** _____ **Date:** _____

Resolution: _____ **Disposition:** _____ **QA: N/C Closed:** _____ **Date:** _____

NCR:		WORK ORDER NON-CONFORMANCE (NCR)						
DATE	STEP	Description of NC Section A	Corrective Action Section B			Verification Section C	Approval Chief Eng	Approval QC Inspector
			Initial Chief Eng	Action Description Chief Eng	Sign & Date			

NOTE: Date & initial all entries

w/o 67590

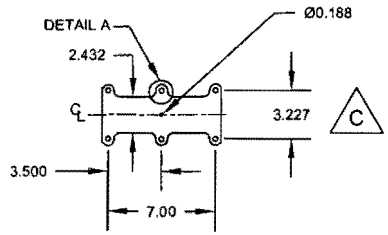

D3564-13F FLAT PATTERN

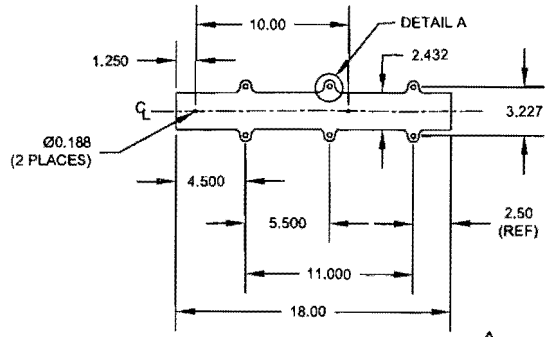

D3564-15F FLAT PATTERN D

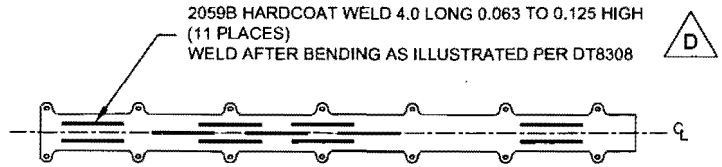

DETAIL D
(D3564-1/-3/-9/-11 WELDING DETAIL)

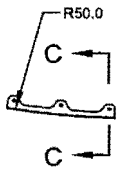

D3564-13 BENDING DETAIL
(MAKE D3564-13 FROM D3564-13F)

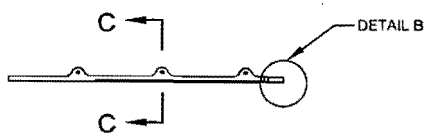

D3564-15 BENDING DETAIL D
(MAKE D3564-15 FROM D3564-15F)

RELEASED
07.09.04

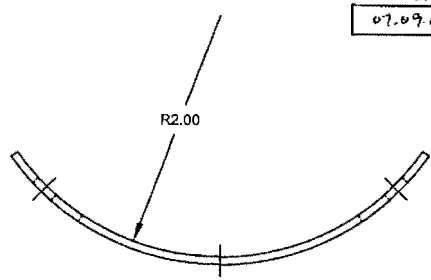

SECTION C-C
SCALE 1:1

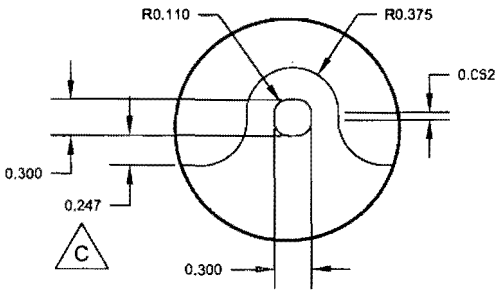

DETAIL A C
SCALE 1:1

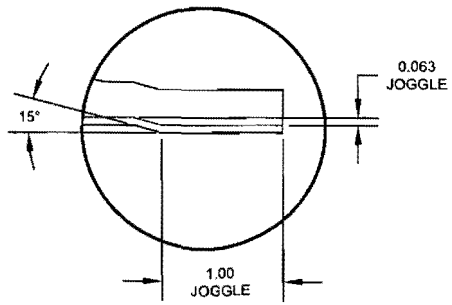

DETAIL B
SCALE 1:1

DESIGN	PH	**DART AEROSPACE LTD** HAWKESBURY, ONTARIO, CANADA	
DRAWN	CB		
CHECKED	PH	DRAWING NO.	REV. D
MFG. APPR.		D3564	SHEET 3 OF 3
APPROVED		TITLE	SCALE
DE APPR.		WEARSHOE	1:8
DATE	07.08.21		

COPYRIGHT © 2006 BY DART AEROSPACE LTD
THIS DOCUMENT IS PRIVATE AND CONFIDENTIAL AND IS SUPPLIED ON THE EXPRESS CONDITION THAT IT IS NOT TO BE USED FOR ANY PURPOSE OR COPIED OR COMMUNICATED TO ANY OTHER PERSON WITHOUT WRITTEN PERMISSION FROM DART AEROSPACE LTD.

Dart Aerospace Ltd

W/O:		WORK ORDER CHANGES					
DATE	STEP	PROCEDURE CHANGE	By	Date	Qty	Approval Chief Eng / Prod Mgr	Approval QC Inspector

Part No: _____ **PAR #:** _____ **Fault Category:** _____ **NCR:** Yes No **DQA:** _____ **Date:** _____

Resolution: _____ **Disposition:** _____ **QA: N/C Closed:** _____ **Date:** _____

NCR:		WORK ORDER NON-CONFORMANCE (NCR)						
DATE	STEP	Description of NC Section A	Corrective Action Section B			Verification Section C	Approval Chief Eng	Approval QC Inspector
			Initial Chief Eng	Action Description Chief Eng	Sign & Date			

NOTE: Date & initial all entries

H:\fFORMS\Quality Assurance\approved QA\NCRWO RevE